PROPERTY DAMAGE, SEVERE INJURY AND/OR DEATH COULD RESULT FROM:

(1) FAILING TO FOLLOW THE INSTRUCTIONS CONTAINED IN THIS MAINTENANCE MANUAL;
OR
(2) REPAIRING, MODIFYING OR ALTERING ANY BARBER/SCT PRODUCT IN A MANNER THAT IS NOT INCLUDED IN THIS MAINTENANCE MANUAL.

IF YOUR SPECIFIC APPLICATION:

(1) REQUIRES A DEVIATION FROM THE INSTRUCTIONS CONTAINED IN THIS MAINTENANCE MANUAL;
(2) REQUIRES A REPAIR, MODIFICATION OR ALTERATION OF A BARBER/SCT PRODUCT THAT IS NOT INCLUDED IN THIS MAINTENANCE MANUAL;
OR
(3) RAISES ANY QUESTION ABOUT THE INSTRUCTIONS SPECIFIED IN THIS MAINTENANCE MANUAL,

PLEASE CONTACT YOUR BARBER/SCT REPRESENTATIVE FOR SPECIFIC INSTRUCTIONS REGARDING YOUR APPLICATION.

TO CONTACT YOUR BARBER/SCT REPRESENTATIVE:

PLEASE SEE THE “STANDARD CAR TRUCK COMPANY CONTACT INFORMATION” PAGE AT THE START OF THE FULL MANUAL.

# Barber Friction Wedges

## 2-A Inspection

- Replacing Barber Friction Wedges and Side Springs
- Barber Friction Wedge Replacement Guide
- Barber Split Wedge Replacement Guide
- Barber Stabilizer Wear Gage Application

## 2-B Parts

- Friction Wedge Interchangeability Matrix
- Barber Iron Wedges
- Barber LifeGuard Wedges
- Barber TwinGuard Wedges
- Barber Split Wedges

## 2-C Repair

- Replacing Barber Friction Wedges and Side Springs
- S-2-E Wedge Holding Fixture

If possible, please supply side frame or bolster AAR code number (9 digit) and casting pattern number, when ordering replacement components.

# Barber Friction Wedges

## Inspection

- Replacing Barber Friction Wedges and Side Springs
- Barber Friction Wedge Replacement Guide
- Barber Split Wedge Replacement Guide
- Barber Stabilizer Wear Gage Application



Wabtec, Standard Car Truck
6400 Shafer Court – Ste 450, Rosemont, Illinois 60018, U.S.A.
Phone (847) 692-6050 Email: SCTTechCustomerService@Wabtec.com

Always Use Original
Barber Parts

# Replacing Barber Friction Wedges and Side Springs

## Barber S-2-E Trucks

### To Remove

1. Lift the truck bolster off of the springs to the top of the side frame opening (see figure 1).
2. Remove all springs.
3. Lower the bolster and disengage from the side frame to gain access to the friction wedges. Note that the friction wedges are free to fall out of the pocket once the bolster is clear of the side frame.

### To Install

1. Insert the friction wedge into the bolster pocket and place on the pocket shelf (see figure 2).
2. Insert a temporary pin to keep the friction wedge in place (if applicable).
3. Engage the bolster with the side frame.
4. Lift the bolster to the top of the side frame opening and remove the temporary pin (if used).
5. Replace all springs.
6. Lower the bolster on to the springs.

## Other Barber Trucks

### To Remove

1. Lift the truck bolster off of the springs to the top of the side frame opening (see figure 1).
2. Remove the outboard corner load spring(s) to gain access to the side spring(s) and friction wedge.
3. Carefully remove the side spring(s), as the friction wedge will drop out of the bolster pocket as shown (see figure 3). Split wedge can drop out as two separate halves.

### To Install

1. Insert the friction wedge into the bolster pocket.
2. Insert a temporary pin to keep the friction wedge in place (if applicable).
3. Place side spring(s) under the friction wedge and remove the temporary pin (if used).
4. Replace the outboard corner load spring(s).
5. Lower the bolster on to the springs.

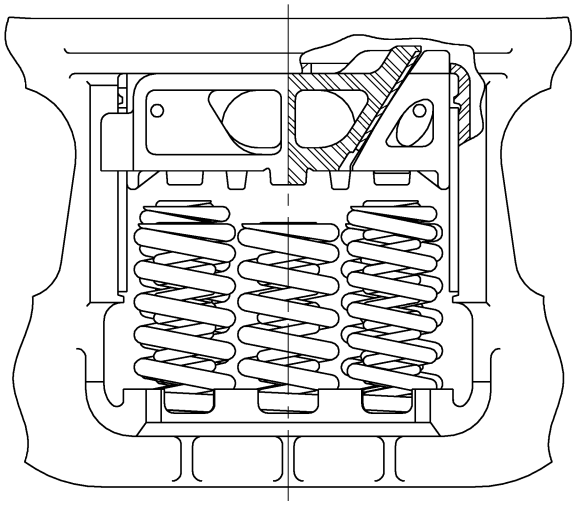

Figure 1

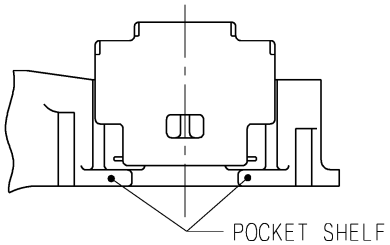


Figure 2

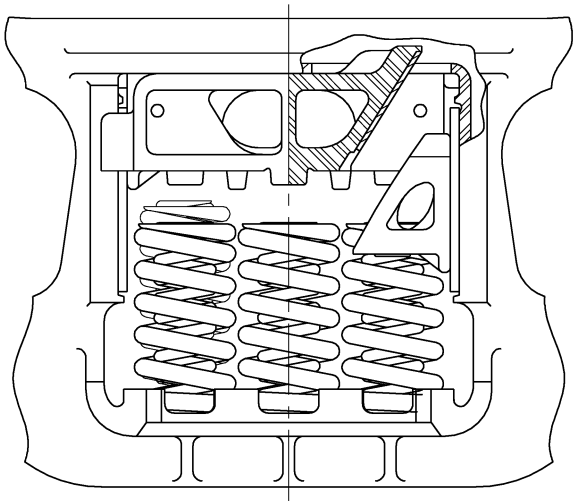

Figure 3

Never Lubricate Barber Friction Wedges



Wabtec, Standard Car Truck
6400 Shafer Court – Ste 450, Rosemont, Illinois 60018, U.S.A.
Phone (847) 692-6050 Email: SCTTechCustomerService@Wabtec.com

Always Use Original
Barber Parts

# Barber Friction Wedge Replacement Guide

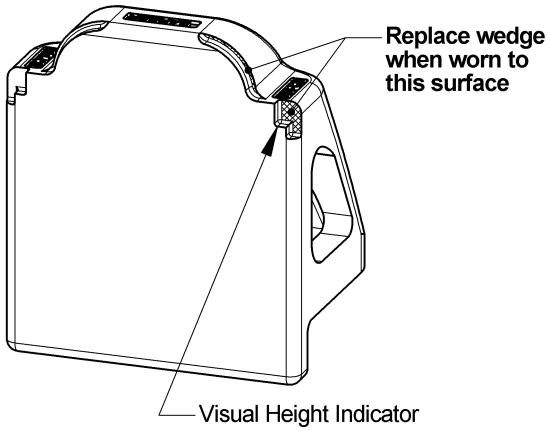


Figure 1

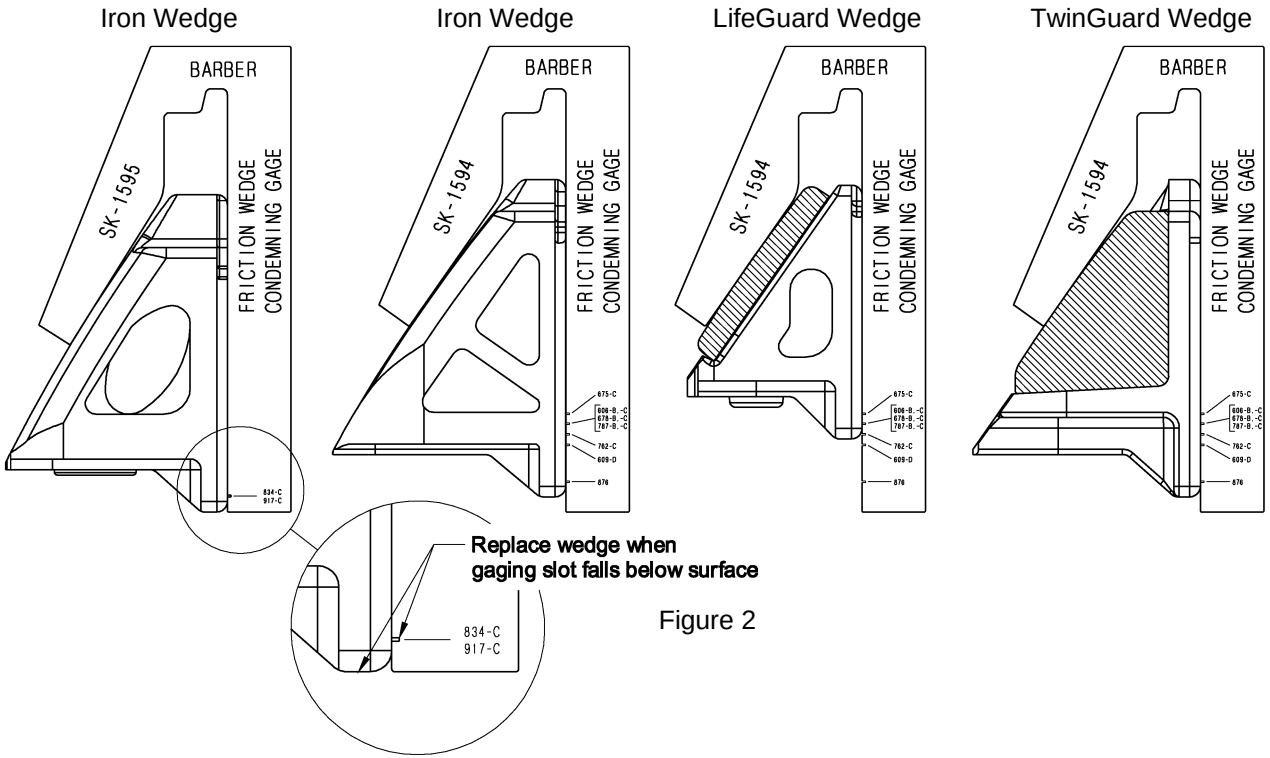


Figure 2

Check the condition of Barber friction wedges regularly. The friction wedge should be replaced when the friction face has worn down to the limit of wear indicator surface (see figure 1) or if the appropriate gage slot on the condemning gage (see table below for applicable gages) extends below the friction face (see figure 2). To establish proper stabilization and prevent extra down time, it is recommended that both friction wedges be replaced during any maintenance overhaul. At the same time, check side springs and wear plates, replacing where necessary. Refer to stabilizer wear gage on page 2-A-4 for replacement conditions.

| Truck Type | Iron Wedge | LifeGuard Wedge | TwinGuard Wedge | Condemning Gage Part Number | Marking on Gage Slot To Check Wedge |
|---|---|---|---|---|---|
| S-2-A | 606-C | - | - | SK-1594 | 606-B, -C |
| | 609-D | 913-LG | - | SK-1594 | 609-D |
| S-2-B, S-2-C | 675-C | - | - | SK-1594 | 675-C |
| | 678-C | - | - | SK-1594 | 678-B, -C |
| S-2-A, S-2-B, S-2-C | 762-C | - | - | SK-1594 | 762-C |
| S-2-B, S-2-C | 787-C | 888-LG | 911-PC | SK-1594 | 787-B, -C |
| S-2-HD, S-2-HD-9C | 834-CB | 950-LG | 916-PC | SK-1595 | 834-C |
| S-2-D | 876 | 877-LG | 921-PC | SK-1594 | 876 |
| S-2-E | 917-C | - | - | SK-1595 | 917-C |

# Barber Split Wedge Replacement Guide

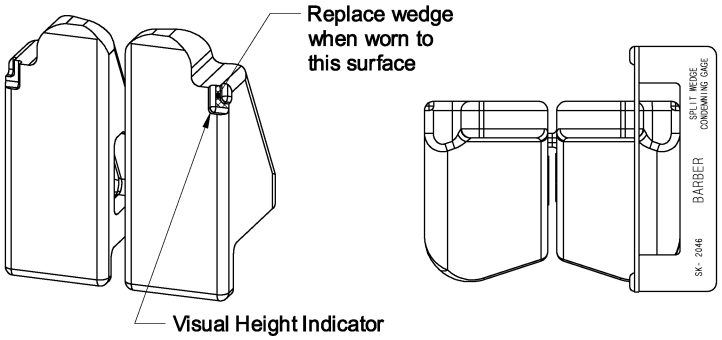


Figure 1

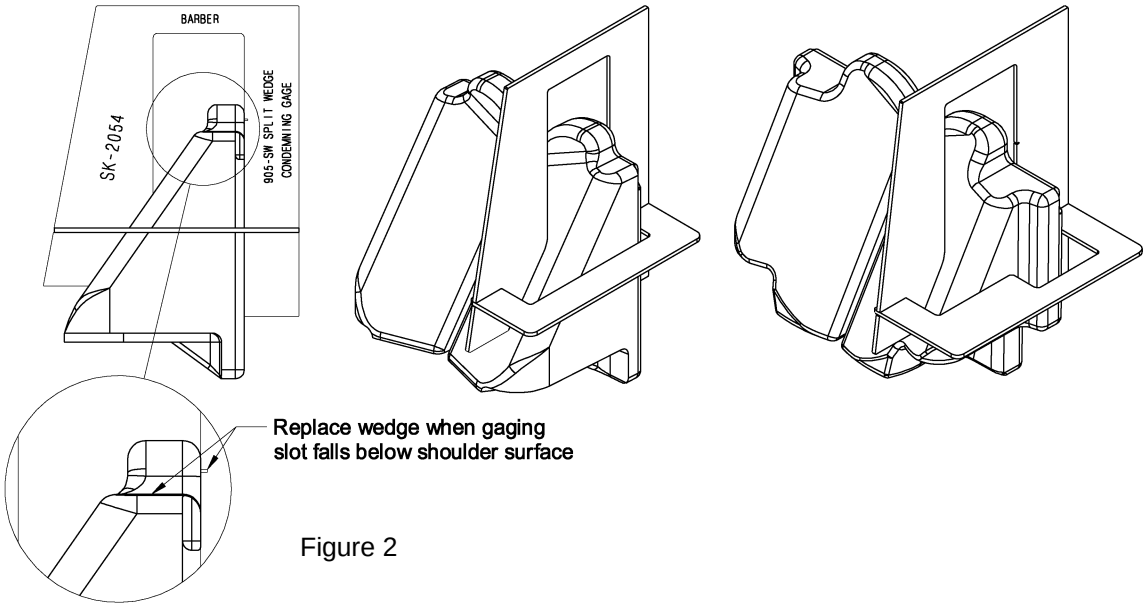


Figure 2

Check the condition of Barber friction wedges regularly. To gage both halves of the split wedge, disassemble the vertical and horizontal condemning gages and reassemble them with the horizontal gage flipped to the other side. The friction wedge should be replaced when the friction face has worn down to the limit of wear indicator surface (see figure 1) or if the gage slot on the vertical condemning gage (see table below for applicable gages) extends below the friction face shoulder (see figure 2). Replace both wedge halves when either half is condemnable. To establish proper stabilization and prevent extra down time, it is recommended that both friction wedges be replaced during any maintenance overhaul. At the same time, check side springs and wear plates, replacing where necessary. Refer to stabilizer wear gage on page 2-A-4 for replacement conditions.

| Truck Type | Split Wedge | Vertical Condemning Gage Part Number | Horizontal Condemning Gage Part Number |
|---|---|---|---|
| S-2-D | 905-SW | SK-2054 | SK-2046 |
| S-2-HD, S-2-HD-9C | 915-SW | SK-2050 | SK-2046 |
| S-2-B, S-2-C | 925-SW | SK-2045 | SK-2046 |
| S-2-E | 945-SW | SK-2062 | SK-2063 |
| S-2-A | 955-SW | SK-2058 | SK-2046 |



Wabtec, Standard Car Truck
6400 Shafer Court – Ste 450, Rosemont, Illinois 60018, U.S.A.
Phone (847) 692-6050 Email: SCTTechCustomerService@Wabtec.com

Always Use Original
Barber Parts

# Barber Stabilizer Wear Gage Application

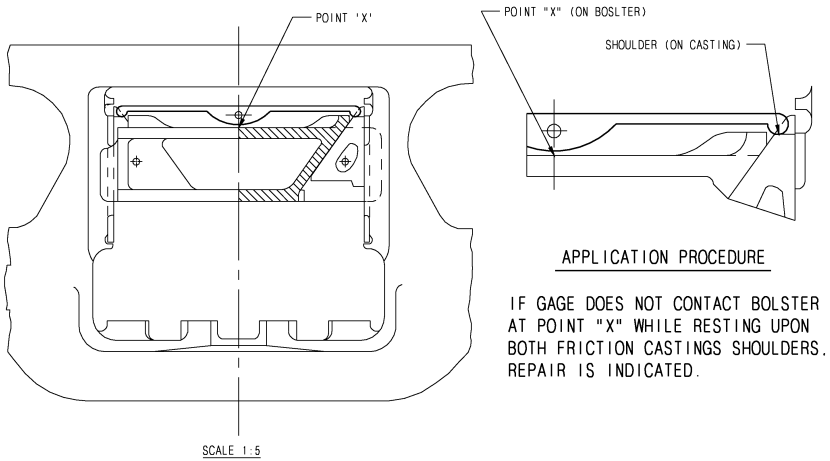


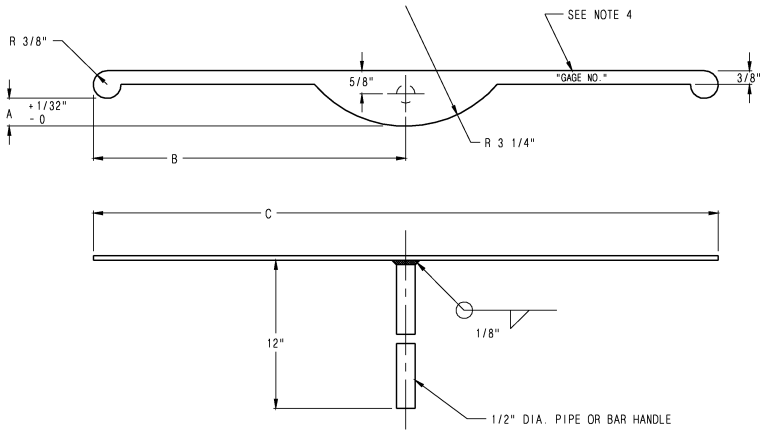


| Stabilizer Wear Gage Table | | | | | | | | |
|---|---|---|---|---|---|---|---|---|
| Gage No. | Bearing [3] Size | AAR [1] Spring Travel | Iron Wedge | Split Wedge | Life Guard Wedge | Twin Guard Wedge | Dim A | Nom. Wedge Height |
| SK-1546-1 | 6 x 11 | D-3 | 609-D | 955-SW | 913-LG [5] | - | 3/4 | 0 |
| | 6 x 11 | D-4 or D-5 | 678-C<br>678-B [2]<br>787-C<br>787-B [2] | 925-SW | 888-LG [5] | 911-PC | | |
| | 6 1/2 x 12 | D-3 | 609-D | 955-SW | 913-LG [5] | - | | |
| | 6 1/2 x 12 | D-5 or D-7 | 876<br>834-CB<br>917-C | 905-SW<br>915-SW<br>945-SW | 877-LG<br>950-LG | 921-PC<br>916-PC | | |
| SK-1546-2 | 6 1/2 x 12 | D-4 or D-5 | 678-C<br>678-B [2]<br>787-C<br>787-B [2] | 925-SW | 888-LG [5] | 911-PC | 1/2 | -1/4 |
| SK-1546-3 | 6 x 11 [4] | D-4 | 675-C | - | - | - | 1 1/4 | 1/2 |
| SK-1546-4 | 7 x 12 | D-5 | 834-CB | 915-SW | 950-LG | 916-PC | 1/2 | -1/4 |
| SK-1546-5 | 7 x 12 | D-3 | 762-C | - | - | - | 1/4 | -1/2 |
| SK-1546-6 | 7 x 12 | D-5 | 762-C | - | - | - | 3/4 | 0 |
| SK-1546-7 | 6 x 11 [4] | D-5 | 787-C | - | - | - | 1 1/4 | 1/2 |

1 Standard A.A.R. spring groups for Barber S-2-A, S-2-B, S-2-C, S-2-D, S-2-HD, S-2-HD-9C, & S-2-E

2 Extended toe friction castings for Canada.

3 All 6 1/2 x 12 gages also apply to 6 1/2 x 9.

4 Low conveyance application only.

5 Rest gage on top center for LifeGuard wedges without shoulders.

# Barber Friction Wedges

## Parts

- Friction Wedge Interchangeability Matrix
- Barber Iron Wedges
- Barber LifeGuard Wedges
- Barber TwinGuard Wedges
- Barber Split Wedges



Wabtec, Standard Car Truck
6400 Shafer Court – Ste 450, Rosemont, Illinois 60018, U.S.A.
Phone (847) 692-6050 Email: SCTTechCustomerService@Wabtec.com

Always Use Original
Barber Parts

# Friction Wedge Interchangeability Matrix

| Truck Type | Iron Wedge | Split Wedge* | LifeGuard Wedge | TwinGuard Wedge** |
|---|---|---|---|---|
| S-2-A | 604-C | - | - | - |
| | 606-C | - | - | - |
| | 609-D | 955-SW | 913-LG-N<br>913-LG-R | - |
| | 762-C | - | - | - |
| S-2-B<br>S-2-C | 675-C | - | - | - |
| | 678-C | - | - | - |
| | 787-C | 925-SW | 888-LG-N<br>888-LG-R | 911-PC |
| | 762-C | - | - | - |
| S-2-D | 876 | 905-SW | 877-LG | 921-PC |
| S-2-HD<br>S-2-HD-9C | 834-CB | 915-SW | 950-LG | 916-PC |
| S-2-E | 917-C | 945-SW | - | - |

* Bolster pocket must have square sidewalls and an insert must be installed in the pocket to use split wedge.
** Bolster pocket must have square sidewalls to use TwinGuard wedge.



Wabtec, Standard Car Truck
6400 Shafer Court – Ste 450, Rosemont, Illinois 60018, U.S.A.
Phone (847) 692-6050 Email: SCTTechCustomerService@Wabtec.com

Always Use Original
Barber Parts

# Barber Iron Wedges

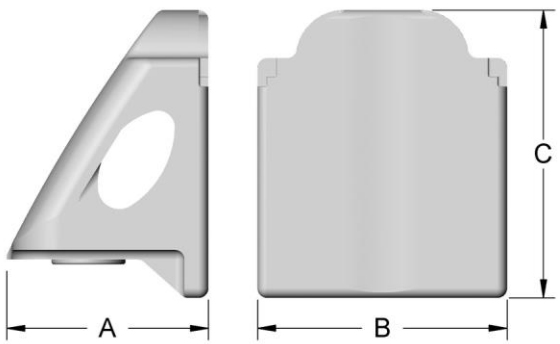


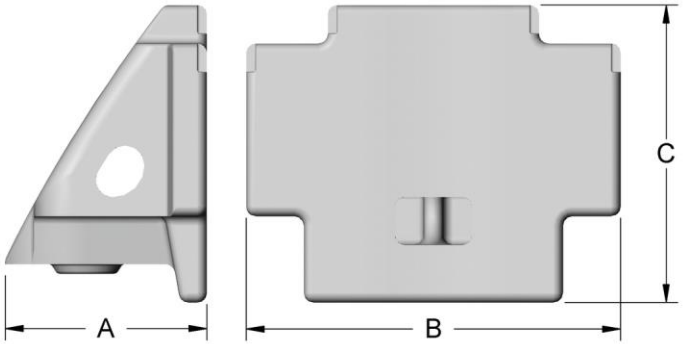


S-2-E

| Truck Type | Iron Wedge | Bearing Size* | Spring Travel | No. of Side Springs | A | B | C | Drawing Number |
|---|---|---|---|---|---|---|---|---|
| S-2-A | 606-C | 5 1/2 x 10 | D3 | 1 | 3 3/4 | 5 | 7 1/4 | 2296 |
| | 609-D | 6 X 11<br>6 1/2 X 12 | D3 | 2 | 4 1/4 | 5 1/2 | 7 1/2 | 2295 |
| | 762-C | 7 x 12 | D3 | 2 | 4 3/8 | 6 1/2 | 7 | 3828 |
| S-2-B | 675-C | 5 x 9<br>5 1/2 x 10 | D4 | 1 | 3 3/4 | 5 | 7 | 2846 |
| | 678-C | 6 x 11 | D4 | 1 | 4 1/8 | 5 1/2 | 6 3/4 | 3027 |
| | 787-C | 6 x 11<br>6 1/2 x 12 | D4 | 2 | 4 1/8 | 5 1/2 | 6 3/4 | 3973 |
| | 762-C | 7 x 12 | D4 | 2 | 4 3/8 | 6 1/2 | 7 | 3828 |
| S-2-C | 675-C | 5 x 9<br>5 1/2 x 10 | D5 | 1 | 3 3/4 | 5 | 7 | 2846 |
| | 678-C | 6 x 11 | D5 | 1 | 4 1/8 | 5 1/2 | 6 3/4 | 3027 |
| | 787-C | 6 x 11<br>6 1/2 x 12 | D5 | 2 | 4 1/8 | 5 1/2 | 6 3/4 | 3973 |
| | 762-C | 7 x 12 | D5 | 2 | 4 3/8 | 6 1/2 | 7 | 3828 |
| S-2-D | 876 | 6 1/2 x 12 | D5<br>D7 | 2 | 5 1/2 | 7 | 7 1/2 | 5534 |
| S-2-HD<br>S-2-HD-9C | 834-CB | 6 1/2 x 12<br>7 x 12 | D5 | 2 | 5 1/4 | 6 1/2 | 7 1/2 | 4734 |
| S-2-E | 917-C | 6 x 11<br>6 1/2 x 12 | D5 | 2 | 5 1/4 | 9 3/4 | 7 3/4 | 6107 |

* All wedges listed for 6 1/2 x 12 bearings are fully compatible with 6 1/2 x 9 bearings.

# Barber LifeGuard Wedges

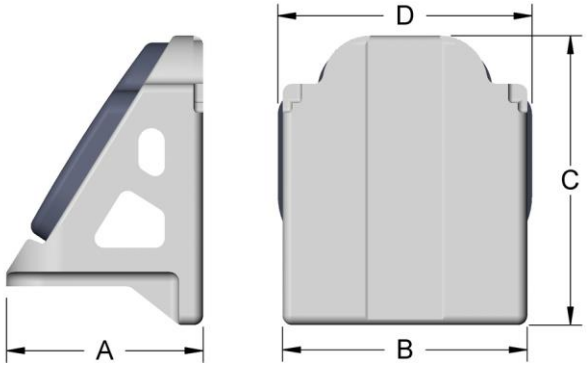


| Truck Type | LifeGuard Wedge | Bearing Size* | Spring Travel | No. of Side Springs | A | B | C | D | Drawing Number |
|---|---|---|---|---|---|---|---|---|---|
| S-2-A | 913-LG-N<br>913-LG-R | 6 x 11<br>6 1/2 x 12 | D3 | 2 | 4 1/8 | 5 1/4 | 6 3/4 | 5 5/8 | 5777 |
| S-2-B | 888-LG-N<br>888-LG-R | 6 x 11<br>6 1/2 x 12 | D4 | 2 | 4 1/8 | 5 1/4 | 6 | 5 5/8 | 5456 |
| S-2-C | 888-LG-N<br>888-LG-R | 6 x 11<br>6 1/2 x 12 | D5 | 2 | 4 1/8 | 5 1/4 | 6 | 5 5/8 | 5456 |
| S-2-D | 877-LG | 6 1/2 x 12 | D5<br>D7 | 2 | 5 1/4 | 6 3/4 | 7 1/2 | 7 1/8 | 5656 |
| S-2-HD<br>S-2-HD-9C | 950-LG | 6 1/2 x 12 | D5 | 2 | 5 1/8 | 6 3/8 | 7 1/2 | 6 5/8 | 5829 |

* All wedges listed for 6 1/2 x 12 bearings are fully compatible with 6 1/2 x 9 bearings.

Wedges are sold as shown above, or individual components can be purchased separately as shown below

| LifeGuard Wedge Components | | |
|---|---|---|
| Wedge | Casting | Pad |
| 913-LG-N | 913 | 5453-N |
| 913-LG-R | 913 | 5454-R* |
| 888-LG-N | 888 | 5453-N |
| 888-LG-R | 888 | 5454-R* |
| 877-LG | 877 | 877-N |
| 950-LG | 950 | 5914 |

* Pad is used for rebuild situations to reduce the amount of welding required to the bolster pocket

Casting

Pad



Wabtec, Standard Car Truck
6400 Shafer Court – Ste 450, Rosemont, Illinois 60018, U.S.A.
Phone (847) 692-6050 Email: SCTTechCustomerService@Wabtec.com

Always Use Original Barber Parts

# Barber TwinGuard Wedges

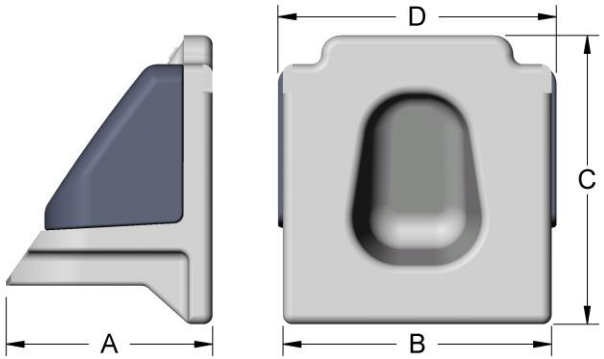


| Truck Type | TwinGuard Wedge* | Bearing Size** | Spring Travel | No. of Side Springs | A | B | C | D | Drawing Number |
|---|---|---|---|---|---|---|---|---|---|
| S-2-B | 911-PC | 6 x 11<br>6 1/2 x 12 | D4 | 2 | 4 1/8 | 5 1/2 | 6 3/4 | 5 7/8 | 5462 |
| S-2-C | 911-PC | 6 x 11<br>6 1/2 x 12 | D5 | 2 | 4 1/8 | 5 1/2 | 6 3/4 | 5 7/8 | 5462 |
| S-2-D | 921-PC | 6 1/2 x 12 | D5<br>D7 | 2 | 5 3/8 | 7 | 7 1/2 | 7 1/4 | 5897 |
| S-2-HD<br>S-2-HD-9C | 916-PC | 6 1/2 x 12 | D5 | 2 | 5 1/4 | 6 1/2 | 7 1/2 | 6 3/4 | 5685 |

* Bolster pocket must have square sidewalls to use TwinGuard wedge.
** All wedges listed for 6 1/2 x 12 bearings are fully compatible with 6 1/2 x 9 bearings.
Wedges are sold as shown above, or individual components can be purchased separately as shown below.

| TwinGuard Wedge Components | | | |
|---|---|---|---|
| Wedge | Casting | Left Pad | Right Pad |
| 911-PC | 911 | 5461-L | 5461-R |
| 921-PC | 921 | 5895-L | 5895-R |
| 916-PC | 916 | 5684-L | 5684-R |

Left Pad

Right Pad

# Barber Split Wedges

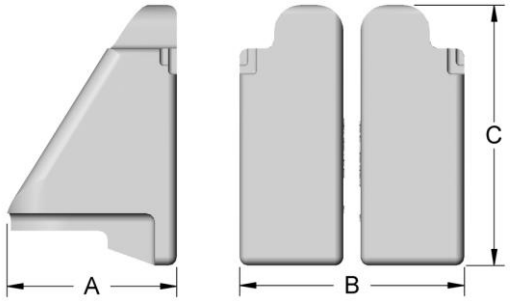


| Truck Type | Split Wedge* | Bearing Size | Spring Travel | No. of Side Springs | A | B | C | Drawing Number |
|---|---|---|---|---|---|---|---|---|
| S-2-A | 955-SW | 6 x 11<br>6 1/2 x 12 | D3 | 2 | 4 3/32 | 5 1/2 | 7 1/2 | 5995 |
| S-2-B | 925-SW | 6 x 11<br>6 1/2 x 12 | D4 | 2 | 3 3/4 | 5 1/2 | 6 3/4 | 5281 |
| S-2-C | 925-SW | 6 x 11<br>6 1/2 x 12 | D5 | 2 | 3 3/4 | 5 1/2 | 6 3/4 | 5281 |
| S-2-D | 905-SW | 6 1/2 x 12 | D5<br>D7 | 2 | 4 15/16 | 7 | 7 1/2 | 5903 |
| S-2-HD<br>S-2-HD-9C | 915-SW | 6 1/2 x 12<br>7 x 12 | D5 | 2 | 4 7/8 | 6 1/2 | 7 1/2 | 5822 |
| S-2-E | 945-SW | 6 x 11<br>6 1/2 x 12 | D5 | 2 | 4 1/4 | 9 3/4 | 7 3/4 | 6023 |

* Bolster pocket must have square sidewalls and an insert must be installed in the pocket to use split wedge.

** All wedges listed for 6 1/2 x 12 bearings are fully compatible with 6 1/2 x 9 bearings.

Wedges are sold as shown above, or individual components can be purchased separately as shown below. It is recommended that the split wedge components be replaced in pairs.

| Split Wedge Components | | | |
|---|---|---|---|
| Wedge | Right | Left | Insert |
| 955-SW | 955-SW-R | 955-SW-L | 5824<br>5286* |
| 925-SW | 925-SW-R | 925-SW-L | 5824<br>5286* |
| 905-SW | 905-SW-R | 905-SW-L | 5902 |
| 915-SW | 915-SW-R | 915-SW-L | 5821 |
| 945-SW | 945-SW-R | 945-SW-L | 6022 |

* Insert is used in “as cast” bolster pockets (pockets designed not to use pocket wear plates).

Right Half

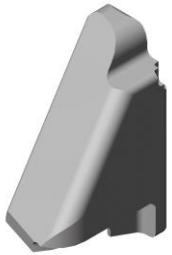

Left Half

Insert

# Barber Friction Wedges

## Repair

- Replace only.  No repair allowed.
- Replacement in pairs is recommended.
- Replacing Barber Friction Wedges and Side Springs
- S-2-E Wedge Holding Fixture



Wabtec, Standard Car Truck
6400 Shafer Court – Ste 450, Rosemont, Illinois 60018, U.S.A.
Phone (847) 692-6050  Email: SCTTechCustomerService@Wabtec.com

Always Use Original
Barber Parts

# Replacing Barber Friction Wedges and Side Springs

## Barber S-2-E Trucks

### To Remove

1. Lift the truck bolster off of the springs to the top of the side frame opening (see figure 1).
2. Remove all springs.
3. Lower the bolster and disengage from the side frame to gain access to the friction wedges. Note that the friction wedges are free to fall out of the pocket once the bolster is clear of the side frame.

### To Install

1. Insert the friction wedge into the bolster pocket and place on the pocket shelf (see figure 2).
2. Insert a temporary pin to keep the friction wedge in place (if applicable).
3. Engage the bolster with the side frame.
4. Lift the bolster to the top of the side frame opening and remove the temporary pin (if used).
5. Replace all springs.
6. Lower the bolster on to the springs.

## Other Barber Trucks

### To Remove

1. Lift the truck bolster off of the springs to the top of the side frame opening (see figure 1).
2. Remove the outboard corner load spring(s) to gain access to the side spring(s) and friction wedge.
3. Carefully remove the side spring(s), as the friction wedge will drop out of the bolster pocket as shown (see figure 3). Split wedge can drop out as two separate halves.

### To Install

1. Insert the friction wedge into the bolster pocket.
2. Insert a temporary pin to keep the friction wedge in place (if applicable).
3. Place side spring(s) under the friction wedge and remove the temporary pin (if used).
4. Replace the outboard corner load spring(s).
5. Lower the bolster on to the springs.

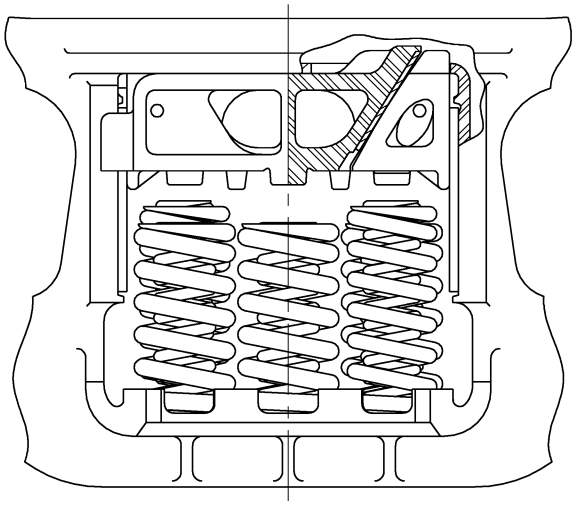

Figure 1

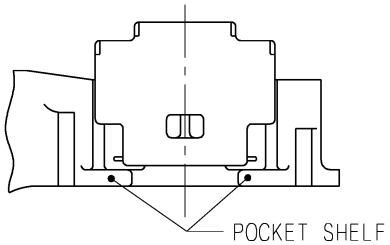


Figure 2

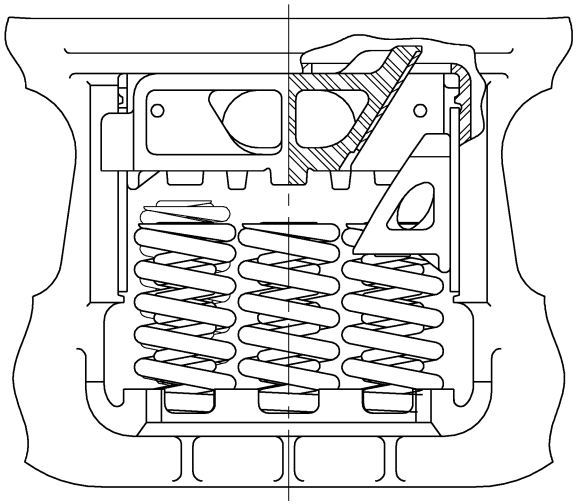

Figure 3

Never Lubricate Barber Friction Wedges



Wabtec, Standard Car Truck
6400 Shafer Court – Ste 450, Rosemont, Illinois 60018, U.S.A.
Phone (847) 692-6050 Email: SCTTechCustomerService@Wabtec.com

Always Use Original
Barber Parts

# S-2-E Wedge Holding Fixture

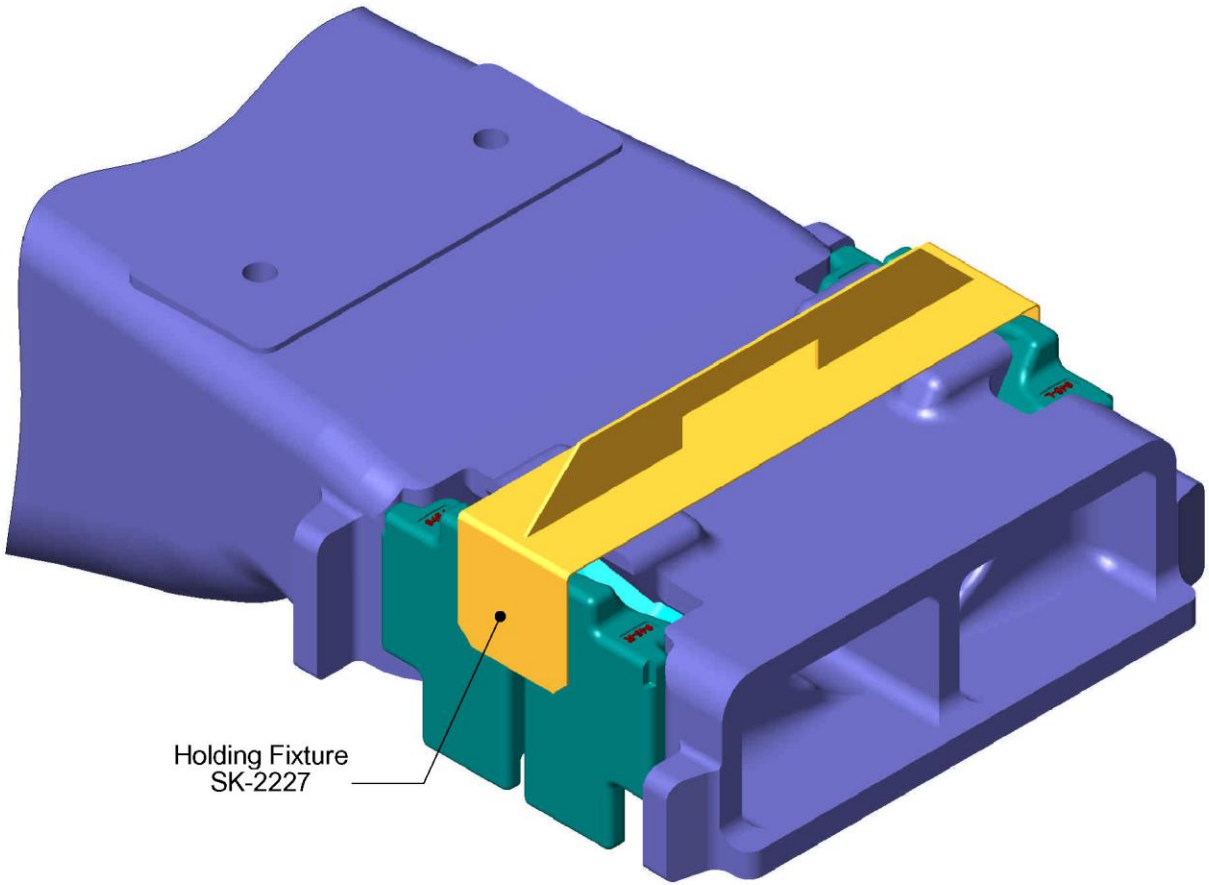


For use with 6 1/2 x 9 or 6 1/2 x 12 S-2-E Trucks arranged for use with split wedge.



Wabtec, Standard Car Truck
6400 Shafer Court – Ste 450, Rosemont, Illinois 60018, U.S.A.
Phone (847) 692-6050 Email: SCTTechCustomerService@Wabtec.com

Always Use Original
Barber Parts